Price OR Systems

AIR CURTAIN SYSTEM

The Price Air Curtain System includes the Price hospital operating room diffusion system (HORD), which utilizes special slot diffusers to form a four-sided vertical air curtain. Discharging air at 15˚ away from the patient, this system creates a physical barrier that separates the surgical area from the recirculating air in the perimeter of the room, and directs particulates toward exhaust grilles.

Unmatched air quality and safety for surgical spaces.

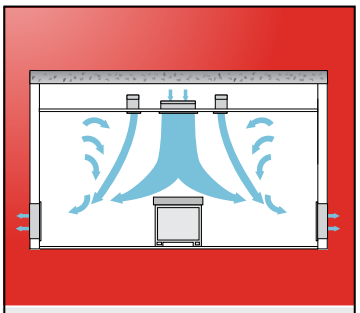

Surgical zone isolation reduces the risk of hospital acquired infection

Includes perimeter air curtain, laminar flow diffusers, ceiling system and SS exhaust grilles

Fully customizable HORD diffuser systems to suit any project

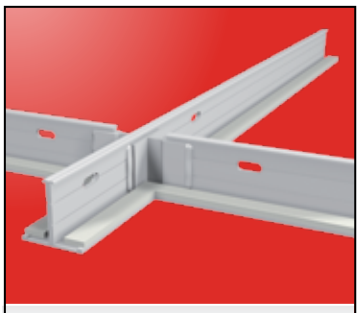

Welded cleanroom ceiling systems with continuous gasket seal

www.price-hvac.com for additional product information, including product videos and brochures.

Product Overview

The Price OR Air Curtain System has been specifically designed to meet the stringent ventilation requirements of today's operating rooms. Through the use of controlled air movement, this system provides a "work area" around the operating table that is as sterile as possible. Not only does the Price Air Curtain System work, it does so with a high degree of comfort and economy.

The HORD system is available in either all-aluminum or all-stainless steel construction, or with stainless steel exposed components (room side) and an aluminum plenum.

Independent studies have proven that the HORD system will provide a clean zone at the surgical work site that exceeds the American College of Surgeons' requirements for Class 1 air cleanliness.

The Price Air Curtain System integrates three basic components to minimize mixing of room and supply air in the operating table area:

1. Laminar Flow Diffusers
2. HORD Air Curtain
3. Low-Level Exhaust Grilles

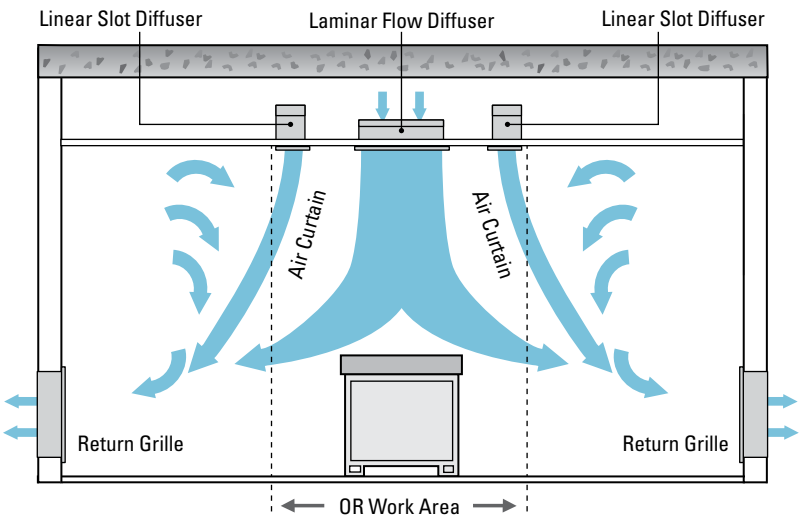

Product Information Index

Component Features E64-E65
Product Information E66
Plenum Systems E67-E69
Performance Data E70
Microbiological Testing.....E71
Selection Guidelines..... E73-E77
Suggested Specification E185

© Copyright Price Industries Limited 2011.

All Metric dimensions ( ) are soft conversion.
Imperial dimensions are converted to metric and rounded to the nearest millimeter.

Component Features

Ceiling Grid

The Price gasketed ceiling grid is constructed of extruded aluminum with profiles designed for improved strength and ruggedness. There are two styles of gasketed ceiling grid available: the Unitee CR and the Unitee HDCR, both of which are approved for use in operating rooms by the Facility Guidelines Institute (FGI, 2010).

Unitee CR

The Unitee CR ceiling provides an attractive, functional ceiling system that prevents air leakage between the ceiling plenum and the occupied space below, thereby preventing the flow of contaminants into, or out of, the clean space.

A major feature of the Unitee CR ceiling is that, thanks to the Price two-piece Universal Assembly Clips, it can be easily removed and reinstalled to provide quick, easy access to the plenum space, which is ideal for renovations and maintenance.

Unitee HDCR

The Unitee HDCR is an all-welded heavy duty extruded aluminum gasketed T-bar grid that prevents air leakage between the ceiling plenum and the occupied space below, thereby preventing the flow of contaminants into, or out of, the clean space.

The ceiling grid is factory welded into modules. Module size depends on the room layout, but maximum module size is 10 ft x 5 ft. Typically, multiple modules are required to make up the ceiling grid. These modules are bolted together in the field, providing a strong, rigid assembly for the ceiling. The Unitee HDCR ceiling may also qualify for LEED credits. Ask your local Price Representative for more details.

Ceiling Panels

In most installations, there are areas of the ceiling that do not contain diffusers, lights, equipment booms, etc. These areas require fill-in panels to maintain the seal between the room and the ceiling plenum space. Price offers a variety of panels for these cases.

The SC panel is an aluminum ceiling panel with the same finish as the T-bar extrusions. The SC panel offers the same durability as the T-bar and accommodates easy cleaning.

The SPB panel is a perforated-face ceiling panel that has a sealed backpan to maintain the seal between the room and ceiling plenum space. The panel is available with different perforated faces to match the appearance of the laminar diffusers.

The Air Curtain System can be configured using a variety of Price manufactured components to suit individual engineering specifications or a specific application. You can select from the following:

PRODUCT	DESCRIPTION	IMAGE
Unitee CR Modular Cleanroom Ceiling	• Modular extruded aluminum ceiling grids with integral gasket specifically designed for cleanroom applications.	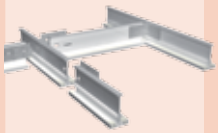
Unitee HDCR Heavy Duty Welded Cleanroom Ceiling	• Heavy duty welded extruded aluminum ceiling grids with continuous gasket specifically designed for cleanroom applications.	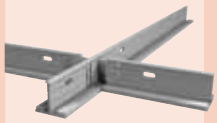
LFD Laminar Flow Diffusers	• Laminar flow diffusers engineered to provide a uniform vertical projection of supply air at controlled low velocity.	
HORD Perimeter Slot Diffusers	• Linear slot diffusers form perimeter curtain around the operating table.	
700H Stainless Steel Return Grilles	• Designed for cleanrooms, laboratories and hospital applications (face is easily removed for cleaning).	
Price offers assistance in coordination with other trades, for example:		
Light Fixtures	• Various models can be sourced to fit Price OR systems and to suit any health care or laboratory application.	
Support Framing	• Metal framing system for medical equipment support (e.g. Unistrut®) can be integrated with Price system components.	

CRITICAL ENVIRONMENTS

All Metric dimensions ( ) are soft conversion.
Imperial dimensions are converted to metric and rounded to the nearest millimeter.

© Copyright Price Industries Limited 2011.

Component Features

The ceiling panels are available in standard square and rectangular sizes, however, Price does manufacture the panels in custom shapes and sizes to suit requirements for installation.

The standard finish for both the Unitee CR and Unitee HDCR ceiling systems and panels is the B12 White Powder Coat Finish. This finish resists scratching and is able to withstand the harsh cleaning chemicals and solvents typically used in hospital operating rooms, laboratories and cleanrooms.

Laminar Flow Diffusers

Laminar flow diffusers (Model LFD) are located over the operating table work area. These perforated-type diffusers produce a non-aspirating (non-mixing) vertical air pattern that "flows" over the operating table on its way to the floor. The laminar diffuser uses only "clean," conditioned air, thereby creating a "washing" or "rinsing" effect.

HORD Air Curtain

The HORD, in basic terms, is a 2 slot linear diffuser that is located at the perimeter of the operating table work area. The slot diffusers discharge a four-sided "air curtain" to enclose the work area. The higher velocity air pattern is projected approximately 15° from vertical away from the work area on all four sides. The two continuous slots create a thick, uniform curtain of air around the operating table work area. This air curtain does two things to aid the laminar flow diffusers in maintaining a clean work area:

- It presents a physical barrier in the form of a clean air curtain between the laminar flow diffusers (LFD) and the old air in the perimeter of the room at the ceiling level where the LFD is most likely to entrain room air.
- It entrains old room air and heavier-than-air gasses to its outer boundary layer and carries them away from the operating table, toward the exhaust grilles, speeding dilution of contaminated room air.

Low-Level Exhaust Grilles

The final components of the Air Curtain System are low-level exhaust grilles (Model 730H or 735H) located symmetrically on the operating room walls. In this location they exhaust both the contaminated air and any heavier-than-air gases.

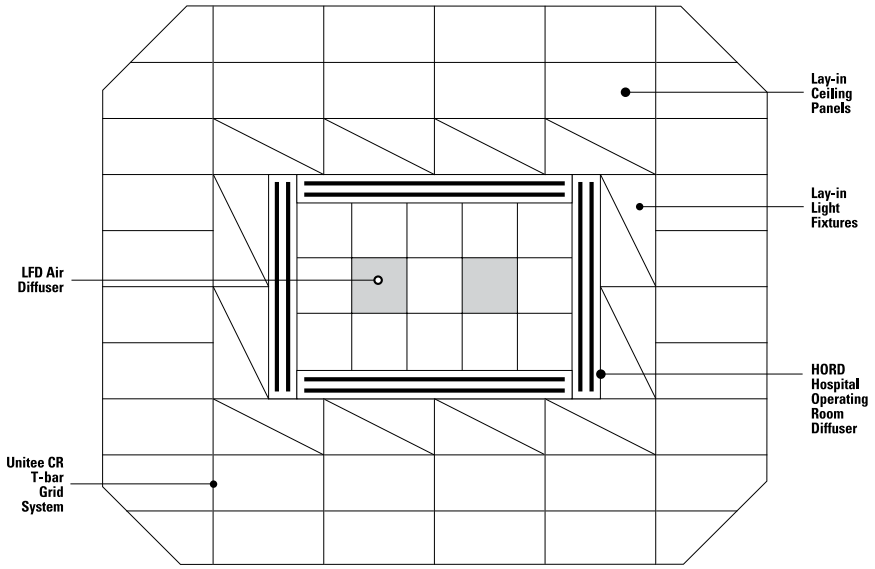

In this application an operating room has been designed using a Unitee ceiling system.

Ceiling Grid

Price offers two gasketed T-bar ceiling systems that integrate with air distribution components to provide a total solution for the operating room. Both the lightweight Price Unitee CR and heavy duty Unitee HDCR include gasketed grid members, metal ceiling panels and steel hold-down clips. The ceiling systems prevent air leakage between the plenum and the OR while allowing ease of access for service.

Benefits

The advantages of this design over a conventional drywall ceiling include:

- Ease of installing ceiling system and other equipment.
- Sealed panels can blank-off sections of ceiling without equipment.
- Accessibility to equipment and systems located in the ceiling space.
- Less disturbance to the space during maintenance and renovation.
- A single manufacturer supplies specialty diffusers and ceiling components, providing a fully integrated system.
- Ceiling and other components can be easily cleaned.
- The ceiling system and other components form a barrier to prevent contamination of the operating space.
- Retrofits can be done by simply removing a panel and replacing it with a new fixture.

© Copyright Price Industries Limited 2011.

All Metric dimensions ( ) are soft conversion.
Imperial dimensions are converted to metric and rounded to the nearest millimeter.

Product Information

HORD

The plenum is constructed of 14 gauge aluminum with continuously welded end caps. All welds are ground smooth and every plenum corner features a 3/4" radius (horizontal and vertical) to ensure the plenum interior can be easily cleaned and disinfected. The mounting frame is fabricated using formed aluminum, while the diffuser face is constructed of formed and extruded aluminum and is attached to the mounting frame with quick-release fasteners for easy removal and cleaning.

HORD inlet volume control dampers are constructed of stainless steel and are wing-nut mounted for easy removal.

The entire plenum, frame, and diffuser face have a B12 white powder coat finish. This finish, selected for its durability and resistance to acids, meets the requirements for hospital use where it will be subjected to regular scrubbing with high concentration detergent solutions.

HORDSS

The plenum is constructed of 20 gauge, 304 stainless steel with continuously welded end caps. All welds are ground smooth and every plenum corner features a 3/4" radius (horizontal and vertical) to ensure the plenum interior can be easily cleaned and disinfected.

The diffuser face is constructed entirely of 20 gauge 304 stainless steel, #4 finish, and has two supply slots with fixed pattern deflectors. The diffuser face is held in place with quick-release fasteners for easy removal when cleaning.

HORD inlet volume control dampers are constructed of 304 stainless steel and are wing-nut mounted for easy removal.

Optional Construction / Features

- Hybrid construction - SS face/AL plenum
- 18 gauge AL plenums
- 23 gauge SS plenums
- Mechanically fastened end caps

HORD

Surface Mount and T-Bar

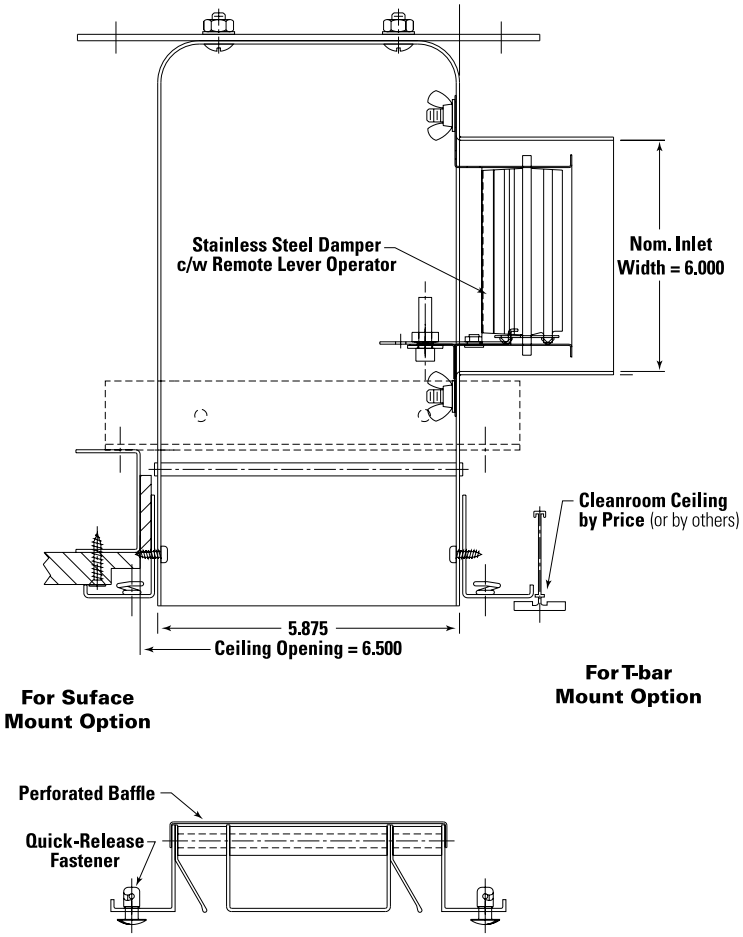

All Metric dimensions ( ) are soft conversion.
Imperial dimensions are converted to metric and rounded to the nearest millimeter.

© Copyright Price Industries Limited 2011.

Modular Plenum System

The modular Price HORD system is supplied as four separate modules. Each module includes a plenum, face assembly and at least one inlet. In order to ensure equal velocity distribution over the face of the HORD section, there should be at least one inlet per 8 ft of HORD section. HORD sections larger than 8 ft should have a minimum of two inlets. HORD plenums are supplied in maximum one-piece section lengths of up to 8 ft. HORD plenums larger than 8 ft are supplied in multiple sections with a flanged connection provided for field assembly.

Modular System

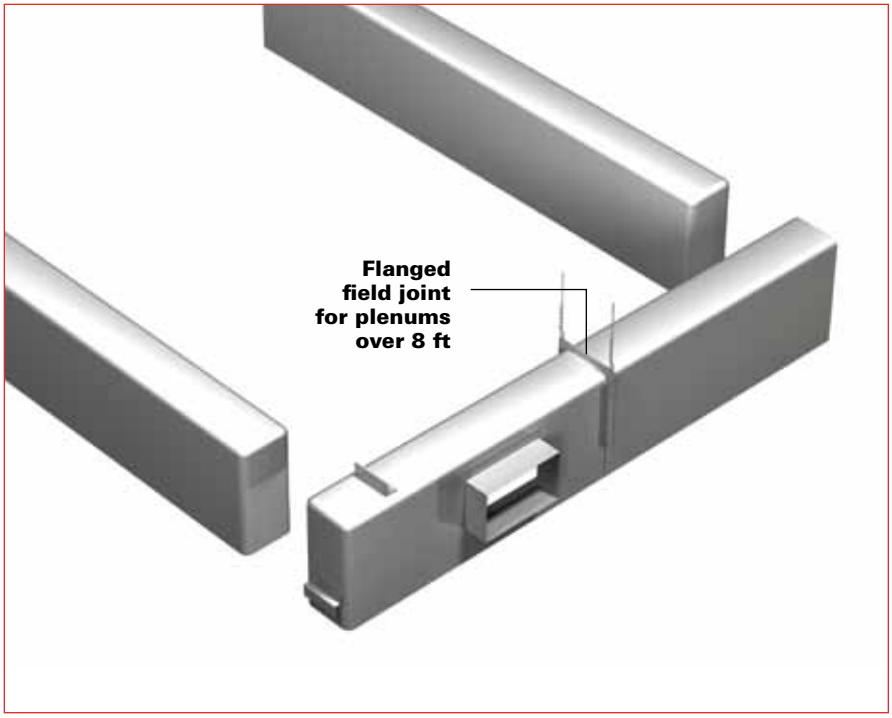

Continuous Plenum System

The requirement to have at least one inlet for every plenum may be a limitation for many operating room applications due to space constraints in the ceiling plenum. This may be particularly true for retrofit applications where an existing hospital area is being converted into an operating room. For these situations Price offers the continuous plenum option in lieu of four independent modular plenums. Four sections of plenum are provided with corner sections, creating a continuous supply plenum. Corner sections allow supply air to freely pass from one plenum section to another, creating a self-balancing plenum system. The continuous plenum systems require only two inlets, compared with at least one inlet on each side of the modular system (minimum four total).

Continuous System

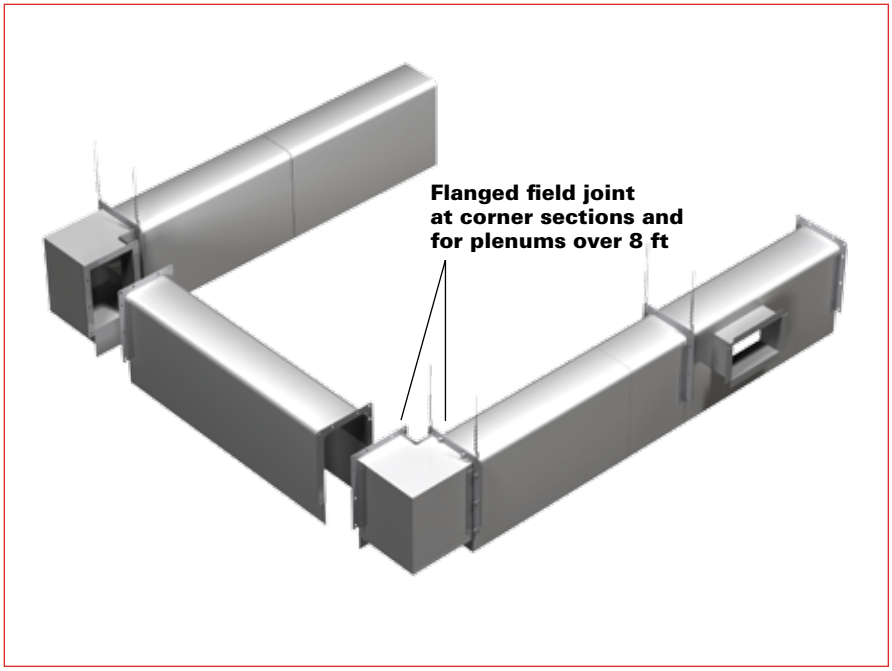

© Copyright Price Industries Limited 2011.

All Metric dimensions ( ) are soft conversion.
Imperial dimensions are converted to metric and rounded to the nearest millimeter.

Selecting HORD Air Curtain Systems - Dimensional Information

An air curtain system is designed to protect the critical area of an operating room, where the patient and surgical team are concentrated. This critical area is, therefore, used to define the dimensional properties of the system. The nominal inside dimensions, or module length and width, of the air curtain system should be specified when selecting the HORD or HORDSS. (Nominal Inside Dimensions = Overall Inside Dimensions - 0.25 in.).

Modular Plenum System

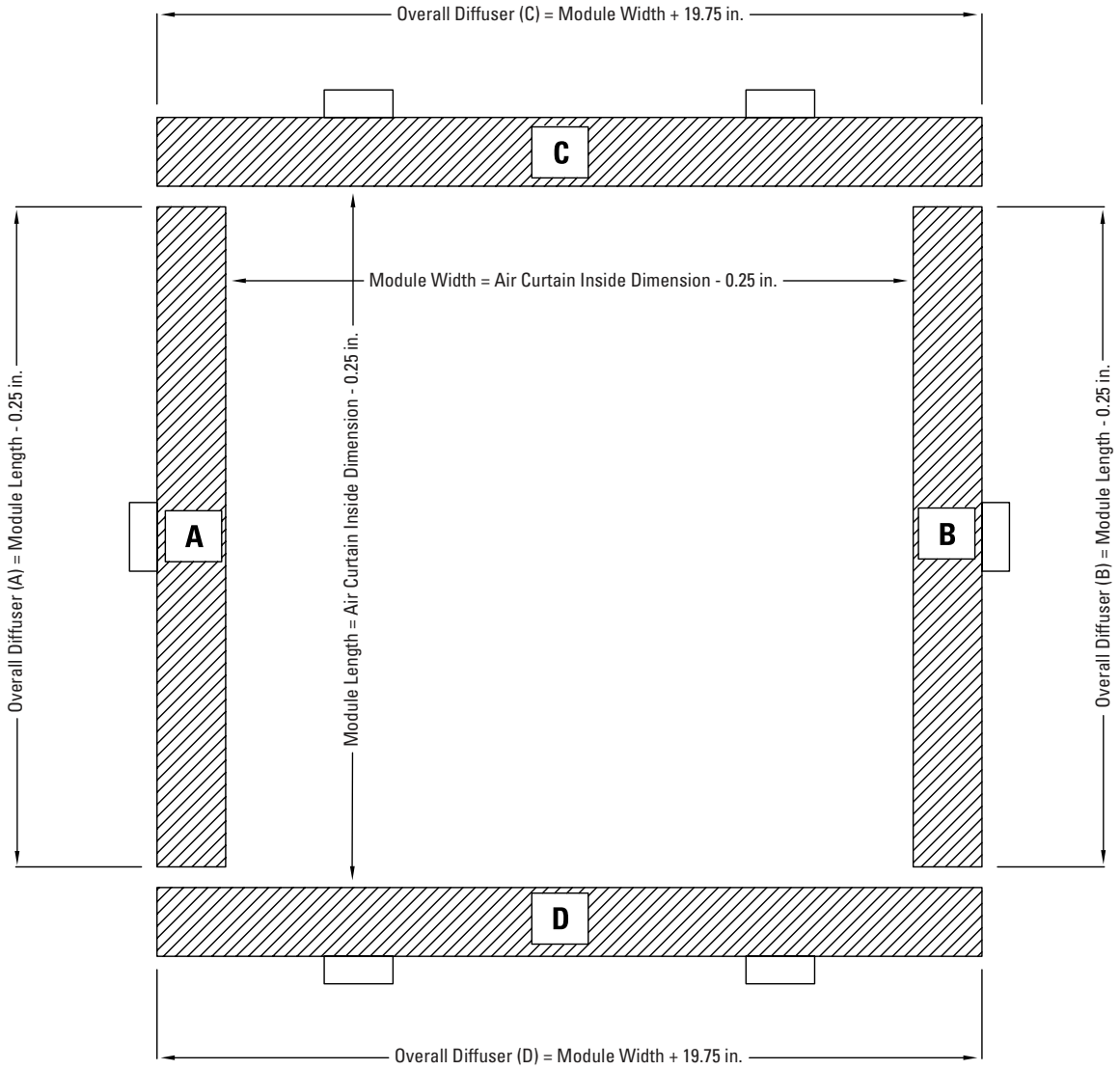

All Metric dimensions ( ) are soft conversion.
Imperial dimensions are converted to metric and rounded to the nearest millimeter.

© Copyright Price Industries Limited 2011.

Selecting HORD Air Curtain Systems - Dimensional Information

Continuous Plenum System

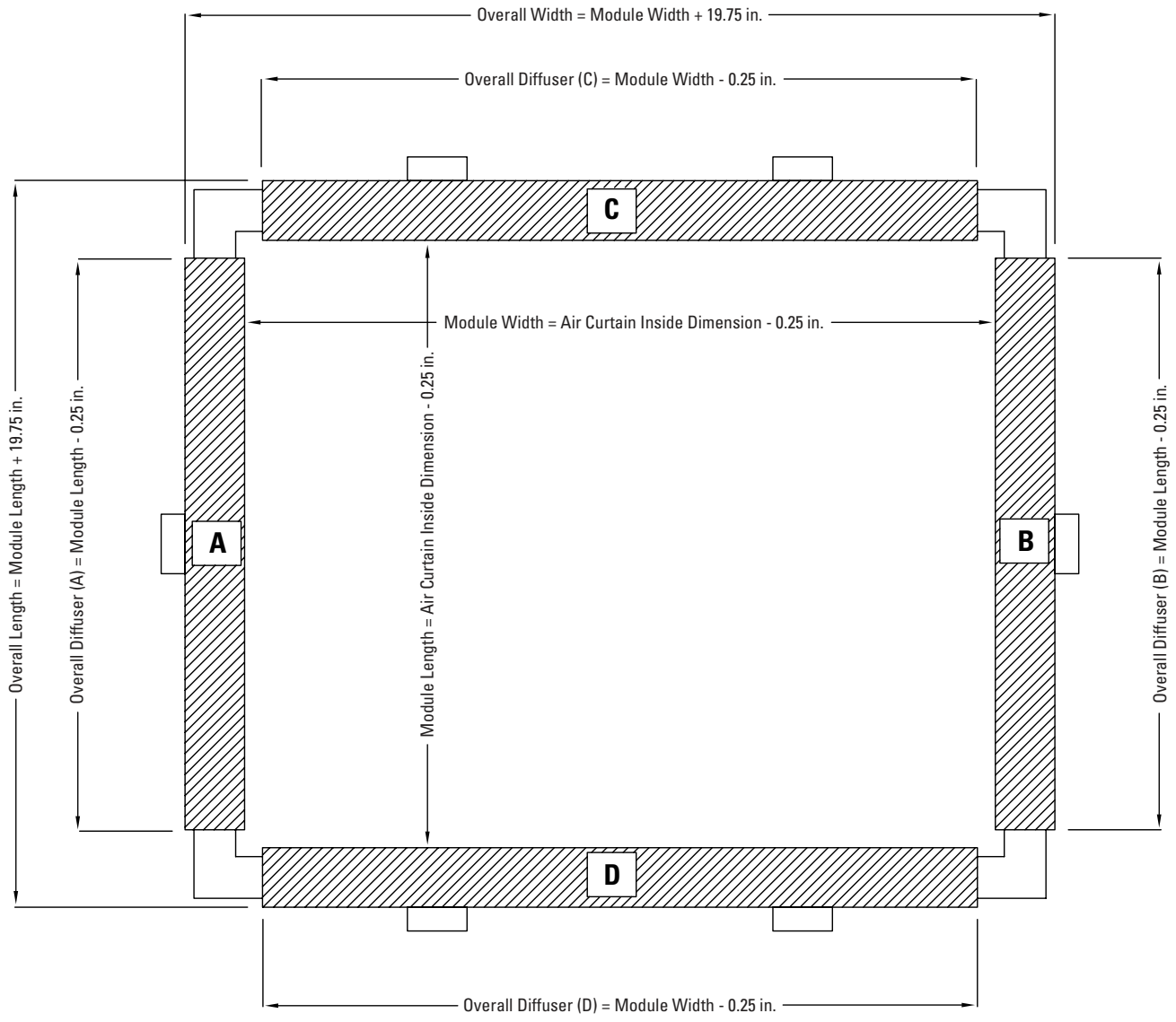

© Copyright Price Industries Limited 2011.

All Metric dimensions ( ) are soft conversion.
Imperial dimensions are converted to metric and rounded to the nearest millimeter.

Performance Data

Nominal Length		cfm / ft				
		25	30	35	40	45
6′	NC	—	—	—	17	21
	THROW	0-1-4	1-1-5	1-2-6	1-2-6	1-3-7
	S.P.	0.031	0.045	0.045	0.059	0.074
7′	NC	—	—	—	19	24
	THROW	0-1-4	1-2-6	1-2-6	1-3-7	2-4-7
	S.P.	0.048	0.070	0.054	0.070	0.088
8′	NC	—	—	16	21	25
	THROW	1-1-5	1-2-6	1-2-7	1-3-7	2-4-8
	S.P.	0.051	0.074	0.061	0.080	0.101
9′	NC	—	—	18	23	27
	THROW	1-1-5	1-2-7	1-3-7	2-3-8	2-4-8
	S.P.	0.054	0.078	0.056	0.073	0.093
10′	NC	—	—	18	23	28
	THROW	1-1-6	1-2-7	1-3-7	2-4-8	2-5-8
	S.P.	0.049	0.071	0.065	0.084	0.107
11′	NC	—	—	20	25	29
	THROW	1-2-6	1-2-7	1-3-8	2-4-8	2-5-9
	S.P.	0.052	0.075	0.071	0.092	0.117
12′	NC	—	15	21	26	31
	THROW	1-2-7	1-2-8	1-3-8	2-4-9	2-5-9
	S.P.	0.066	0.095	0.066	0.086	0.109
14′	NC	—	18	23	28	33
	THROW	1-2-7	1-3-8	2-4-9	2-5-10	3-6-10
	S.P.	0.069	0.099	0.076	0.099	0.126

Performance Notes:

1. Tested in accordance with ASHRAE Standard 70-2006 "Method of Testing for Rating the Performance of Air Outlets and Inlets."
2. Air flow is in cubic feet per minute per foot, cfm/ft.
3. All pressures are in inches of water, in. w.g.
4. Throw values are given in feet to terminal velocities of 150-100-50 fpm based on 10 °F cooling.
5. Blanks "—" indicate an NC level below 15.

All Metric dimensions ( ) are soft conversion.
Imperial dimensions are converted to metric and rounded to the nearest millimeter.

© Copyright Price Industries Limited 2011.

Microbiological Testing

In order to quantify the effectiveness of the Price Air Curtain System in delivering clean air to the operating room work site, we have conducted several field tests with actual installed systems. While test procedures exist for rating the cleanliness level of cleanrooms, they do not necessarily apply to operating rooms. The cleanroom test procedure measures the quantity of all particles of a specific size range. However, in an OR we are primarily concerned with colony forming units or bacterial counts due to the risk of post-operative infections, not simply particles.

To address this issue, the American College of Surgeons Committee on Operating Room Environment published a definition of Surgical Microbiological Clean Air, which defined three classes of air cleanliness as follows:

Class I Containing a maximum of one bacterial particle per cubic foot of air.

Class V Containing a maximum of five bacterial particles per cubic foot of air.

Class XX Containing a maximum of 20 bacterial particles per cubic foot of air.

Price has had multiple Air Curtain System installations tested for microbiological air cleanliness per the College of Surgeons methodology. All tests were performed by independent agencies and in each case results confirmed that the Price systems provided an area around the operating table which met the American College of Surgeons' requirement for a Class I environment.Test reports can be provided by contacting your local Price representative.

© Copyright Price Industries Limited 2011.

All Metric dimensions ( ) are soft conversion.
Imperial dimensions are converted to metric and rounded to the nearest millimeter.

Considerations for Human Comfort

In addition to providing microbiologically clean air into the operating room, the air distribution system must maintain a level of comfort for the occupants.

It has been shown that in a uniform environment with air motion of 25 fpm or less, normally clothed sedentary or slightly active individuals are comfortable when the dry bulb temperature is within the range of 75 °F to 77 °F and the relative humidity is within the range of 26% to 60%.

Although comfort conditions may be maintained over a fairly wide range of dry bulb temperatures with velocities less than 25 fpm, it is not always possible in practice to limit the air motion within a whole space to such low values. This is especially true during cooling.

The occupant may then be subject to draft conditions defined as: "any local sense of cooling at a portion of the body - caused either by an excessive movement of air of normal temperature, by air having a normal velocity but a lower temperature, by excessive radiation to a cold surface, or any combination of these three effects."

Extensive studies have resulted in relationships between local temperatures, velocities and comfort reactions. On the basis of the temperature and velocity, at a specific point an effective draft temperature can be calculated for that location. The draft temperature is calculated by the equation $\Theta = (T\text{-}Tc) - 0.07(V\text{-}30)$.

Where:

Θ = draft temperature
T = local temperature
Tc = control temperature
V = local velocity

Research indicates that a high percentage of people are comfortable where the effective draft temperature difference is between -3 °F and +2 °F and the air velocity is less than 70 fpm. This comfort zone is illustrated as the shaded area on the chart (right). Using this draft temperature as our criteria, the comfort level of our air curtain system can be determined.

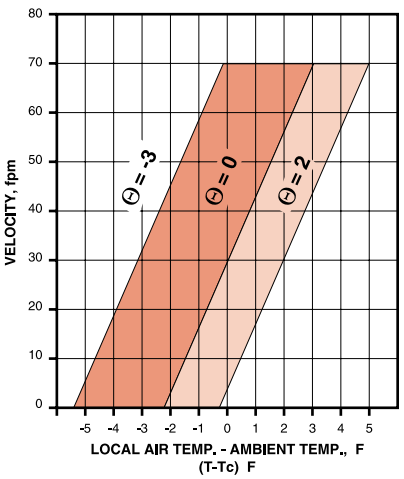

Where: Θ = (T-Tc) -0.07 (V-30)
Θ = Draft Temperature, °F
T = Local Temperature, °F
Tc = Control Temperature, °F
V = Local Velocity

* ASHRAE Standard 55

Performance Summary

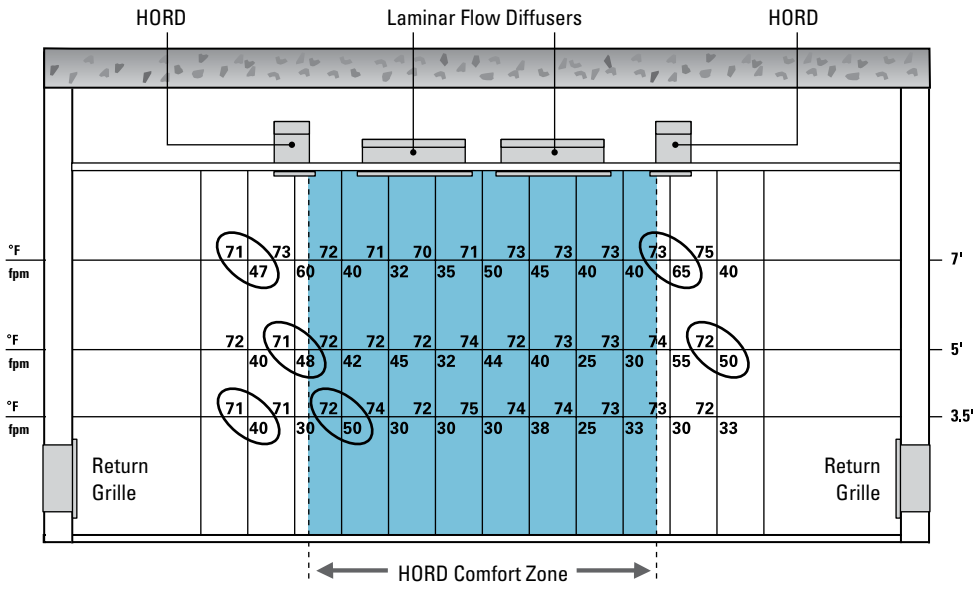

A mockup of an operating room utilizing the HORD air curtain system was constructed in the Price laboratory. The room dimensions were 20 ft x 15 ft x 9 ft high. Total room supply air volume was 1400 cfm, providing approximately 30 air changes per hour. 1100 cfm was supplied to the HORD slot with 300 cfm supplied to each model LFD laminar flow diffuser. The total HORD slot length was 35.5 ft, resulting in 31 cfm/linear ft of HORD. The return air volume was 1200 cfm. Supply temperature equalled 60 °F, while the average room temperature was maintained at 74 °F.

Velocity and temperature readings were recorded for a cross section of the room as illustrated above. The circled points represent draft temperatures beyond the comfort zone. The results indicate a high level of comfort in the (shaded) occupied zone. Any drafts are limited to the areas directly under the linear slot diffuser.

All Metric dimensions ( ) are soft conversion.
Imperial dimensions are converted to metric and rounded to the nearest millimeter.

© Copyright Price Industries Limited 2011.

Selection Guidelines

Selection of an air curtain system must take into account the standard air distribution design parameters such as sound, pressure drop and comfort, plus the additional issue of contamination control. The following guidelines are presented based on industry standards and publications, combined with product research conducted in the Price Laboratories and numerous system installations.

Module Size

The module size of the HORD slot diffuser system is governed by four factors:

- The size of the area to be contained; at minimum, the size of the operating table plus a 3 ft (915 mm) perimeter work area for the surgical team.
- The total air volume required by the room to achieve the desired number of air changes. It may be necessary in the case of a very large operating room to use a larger module of HORD than dictated by the work area in order to ensure the cfm per linear ft of HORD is within acceptable limits.
- Allowances and concessions may have to be made for other ceiling mounted equipment such as I.V. tracks, surgical lights, gas columns, general lighting, etc.
- The shape of the operating room may restrict the space in one direction or another.

Operating Room Supply

The operating room supply air volume is dictated by the number of air changes per hour required, typically a minimum of 20 air changes per hour for a recirculating air supply system as recommended by ASHRAE and CSA. The table on this page summarizes guidelines for operating room ventilation rates and filtration efficiency based on 2007 ASHRAE HVAC Applications Handbook.

The total air supply is calculated in the following manner:

$$\text{Total Room cfm} = \frac{\text{Volume of Room (ft}^3\text{) x Air Changes per Hour}}{60}$$

The total room air flow is divided between the HORD air curtain system and the laminar flow diffusers (LFD) per the following procedure.

HORD Air Flow Rate

In order to develop a proper air curtain, the HORD must have a minimum of 25 cfm per linear foot (39 L/s per linear meter) of HORD. The maximum capacity, due to air pattern projection considerations, is usually 45 cfm per linear foot (70 L/s per linear meter).

For optimum performance, the air flow rate for the HORD should be between 30 and 40 cfm per linear foot (46-62 L/s per linear meter). Generally, the HORD air curtain should be selected to supply approximately 60-75% of the total air supply into the operating room.

Refer to page E70 for performance data of the HORD linear diffuser at various air flow rates. Note that at the maximum recommended flow rate of 45 cfm/ft, the sound level and pressure drop are relatively insignificant.

The most important performance parameter is the diffuser throw. In order to avoid undesirable turbulence at the floor level, it is recommended that the 50 fpm throw value does not exceed the floor to ceiling height.

The throw data is presented at a 10 °F cooling differential between supply air and room air. Throw may vary slightly with other cooling differentials.

Recommended air flow rates for the HORD air curtain are presented for typical module sizes on page E74.

Typical Ventilation Rates

Function Space	Minimum Air Changes of Outdoor per hour	Minimum Total Air Changes of Air per hour
Operating Room - Recirculated Air Systems (ASHRAE)	4	20
Operating Room - Recirculated Air Systems (CSA)	6	20

Filter Efficiencies

Function Space	Filter Efficiency, %
Orthopedic Operating Room	99.97%
Bone Marrow Transplant Operating Room	99.97%
Organ Transplant Operating Room	99.97%
General Procedure Operating Rooms	90%

© Copyright Price Industries Limited 2011.

All Metric dimensions ( ) are soft conversion.
Imperial dimensions are converted to metric and rounded to the nearest millimeter.

Selection Guidelines

LFD Air Flow Rate

The LFD diffusers supply approximately 25-40% of the total operating room air to produce a column of clean, conditioned air within the air curtain. Since the "work area" served by the laminar flow diffusers is typically less than 25% of the total operating room area, the net result is a higher air change rate within the air curtain than the room average. This results in a faster dilution of the contaminated air produced at the operating table. Refer to the table on this page for values of air change rate within the air curtain for typical system modules.

The Primary Diffuser Array Area, as defined by ASHRAE Standard 170-2008, is the ceiling area directly above the area defined by the operating table plus a 12 in. offset in each direction (see image). No more than 30% of this area can be used for non-diffuser equipment (ASHRAE, 2008) (FGI, 2010). Operating table sizes will vary but typically 20 - 24 ft^2 of nominal diffuser face area inside the primary diffuser array area is required to satisfy code.

Another layout condition is proximity of the laminar flow diffusers to the linear slot diffusers generating the air curtain. The laminar flow diffusers should be located a minimum of 1 ft from any linear slot diffuser to avoid entrainment of the laminar flow supply into the air curtain.

The ASHRAE HVAC Design Manual for Hospitals and Clinics suggests that the optimum sizes of LFD diffusers should be based on approximately 30 cfm/ft^2 of nominal face area. For LFD performance see page E79.

Other performance considerations for LFD selection are room noise level and outlet pressure drop. As operating rooms tend to be acoustically "hard" rooms (i.e. little room attenuation), the LFDs should be selected on the quieter side. Recommended air flow rates for laminar flow diffusers are presented for typical module sizes.

Ceiling mounted equipment such as surgical lights, I.V. tracks and gas columns may necessitate the selection of various sizes and configurations of LFDs in order to get the laminar air flow as close to centered on the OR table as possible.

Diffuser Placement

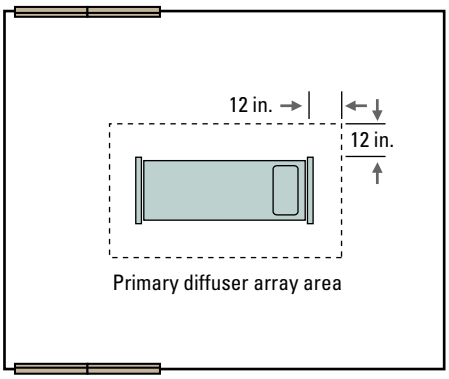

Air Changes Within Curtain

Module Length		Module Width	Total System cfm Range	Laminar Flow cfm Range	Air Changes Within Curtain (ach)
10′-0″	X	6′-6″	1200-1430	300-360	31-37
			1430-2000	360-500	37-51
11′-0″	X	6′-6″	1270-1505	320-380	30-35
			1505-2130	380-530	35-49
12′-0″	X	6′-6″	1330-1600	330-400	28-34
			1600-2270	400-570	34-49
10′-0″	X	7′-6″	1270-1400	320-350	28-31
			1400-2130	350-530	31-47
12′-0″	X	7′-6″	1400-1710	350-430	26-32
			1710-2400	430-600	32-44
14′-0″	X	7′-6″	1530-2130	380-530	24-34
			2130-2530	530-630	34-40
10′-0″	X	8′-6″	1330-1680	330-420	26-33
			1680-2270	420-570	33-45
12′-0″	X	8′-6″	1470-1800	370-450	24-29
			1800-2530	450-630	29-41
14′-0″	X	8′-6″	1600-2050	400-510	22-29
			2050-2670	510-670	29-38
10′-0″	X	9′-6″	1530-2000	380-500	27-35
			2000-2530	500-630	35-44
12′-0″	X	9′-6″	1670-2000	420-500	25-29
			2000-2800	500-700	29-41
14′-0″	X	9′-6″	1800-2200	450-550	23-28
			2200-3070	550-770	28-39

All Metric dimensions ( ) are soft conversion.
Imperial dimensions are converted to metric and rounded to the nearest millimeter.

© Copyright Price Industries Limited 2011.

Selection Guidelines

Exhaust

An operating room should maintain a positive pressure differential with adjacent spaces at all times. For this reason, the operating room exhaust air volume should be less than the total supply air volume. The required air flow offset (between supply and exhaust) to achieve a desired differential pressure relative to adjacent spaces is dependent on how well the room envelope is sealed. As such, it is not possible to calculate the offset value in advance of room commissioning and system balancing. However, a typical OR would have approximately 20% more air supplied to the room than is exhausted.

The exhaust grilles should be located symmetrically on the walls near the floor level. The recommended unit for this application is a grille with 45° deflection blades, either 0.50 in. (13) or 0.75 in. (19) on center, constructed of stainless steel for strength and ease of cleaning. The unit should have quick-release fasteners for easy removal and cleaning.

See pages E80 - E83 for a complete description of Price stainless steel return grilles (Model 700H) and their performance data.

Selection at a core velocity of approximately 500 fpm will result in reasonable sound level and pressure drop.

Stainless steel construction is recommended for the low-level exhaust for durability and ease of cleaning (Model 700H/700FF).

© Copyright Price Industries Limited 2011.

Ceiling System Integration

Design Objectives

Unitee HDCR Series is a heavy duty suspension ceiling system with gasket that prevents air leakage between the ceiling plenum and the occupied space below, thereby preventing the flow of contaminants into or out of the clean zone.

The Unitee HDCR is designed with heavy duty extruded aluminum T-bars factory welded in large sections.The sections are to be bolted or clipped together in the field by others. Maximum available size of a section is 10′ x 5′. Modules use a factory or field installed continuous length of gasket with a single butt joint per module. Extra gasket is also supplied for field installation along the perimeter and field joints.

Plaster perimeter ceiling is recommended for ease of installation.

Finishing

- B12 white powder coat (standard finish)
- 66 brushed aluminum
- AC clear anodized
- Other finishes available

Ceiling Panels

Painted metal panels are available in various styles to suit the application and match adjacent diffusers.

Example Layout:

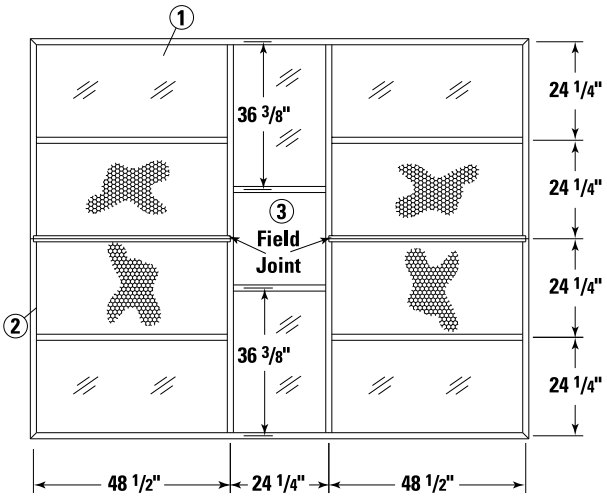

1 Typical Lighting Fixture
2 Typical Diffuser
3 Fill-in Panel

Dimensions are oversized 1/8″ per foot to account for thicker T profile. This allows standard module size products such as lights and diffusers to fit the grid.

All Metric dimensions ( ) are soft conversion.
Imperial dimensions are converted to metric and rounded to the nearest millimeter.

© Copyright Price Industries Limited 2011.

Selection Guide

The following tables are provided as a guideline for designers. The module sizes and laminar diffuser sizes represent typical selections for a given system air volume range. Please note that Price offers the HORD linear diffusers in custom lengths tailored to the specific application. A variety of standard size LFD diffusers are also available. The flexibility of the HORD diffuser can accommodate almost any ceiling configuration.

Linear Slot						LFD							
Module (ft)						LFD Array (ft)							
L	x	W	Approx. Active Slot Length (ft)	cfm/Lin.ft	Total Air Curtain cfm	Qty.	L	x	W	Nom. LFD Area (ft^2)	cfm/ ft^2	Total LFD cfm	Total System cfm
10	x	6	33.8	25	845	2	4	x	2	16	25	400	1245
10	x	8	37.8	30	1134	2	4	x	2	16	30	480	1614
12	x	8	41.8	35	1463	3	4	x	2	24	35	840	2303
12	x	10	45.8	40	1832	3	4	x	2	24	25	600	2432
12	x	12	49.8	45	2241	3	4	x	2	24	30	720	2961
14	x	12	53.8	25	1345	3	4	x	2	24	35	840	2185
14	x	14	57.8	30	1734	3	4	x	2	24	25	600	2334
16	x	14	57.8	35	2023	3	4	x	2	24	30	720	2743

© Copyright Price Industries Limited 2011.

All Metric dimensions ( ) are soft conversion.
Imperial dimensions are converted to metric and rounded to the nearest millimeter.

HORD – Hospital Operating Room Diffuser

HORD - Hospital Operating Room Diffuser

A. Each operating room air curtain system shall consist of linear slot diffusers around the perimeter of surgical zone and laminar flow diffusers directly above the surgical table. Ceiling coverage with laminar flow diffusers shall satisfy ASHRAE 170-2008 requirements.
B. The linear slot diffuser plenums and mounting frames shall be constructed out of 14 gauge aluminum, with all end-cap seams continuously welded and ground smooth. All horizontal and vertical plenum corners shall feature ¾" radii to facilitate cleaning. Plenums shall be available in one-piece construction up to 10 ft long with field assembly required for longer sections. Modular plenum systems shall utilize one independent plenum for each side of the system to provide a consistent air curtain barrier. Using multiple independent plenums to satisfy length requirements of any one side shall not be permitted. Plenum inlets shall include room-side-removable stainless steel opposed blade dampers. Damper adjustment shall be possible without removing the diffuser face. The linear slot diffuser face assembly shall feature two slots, an extruded aluminum frame, equalizing baffle and fixed pattern controllers. Adjustable pattern controllers shall not be permitted.
C. The laminar flow diffusers shall feature an 18 gauge aluminum plenum and extruded aluminum mounting frame. Inlets shall include stainless steel butterfly dampers that can be adjusted through a removable plug in the diffuser face. The laminar flow diffuser face assembly shall have an extruded aluminum frame, 13% free-area aluminum perforated face and an aluminum equalizing baffle to evenly distribute air across the diffuser face.
D. All diffuser face assemblies (linear slot and laminar flow) shall be secured using ¼ turn quick-release fasteners and safety cables for ease of installation and removal.
E. All aluminum components of the operating room air system shall have a baked-on powder coat finish. Paint finish must demonstrate no degradation when tested in accordance with ASTM D1308 (covered spot & immersion) and ASTM D4752 (MEK double rub) paint durability tests.

HORDSS - Hospital Operating Room Diffuser

A. Each operating room air curtain system shall consist of linear slot diffusers around the perimeter of surgical zone and laminar flow diffusers directly above the surgical table. Ceiling coverage with laminar flow diffusers shall satisfy ASHRAE 170-2008 requirements.
B. The linear slot diffuser plenums and mounting frames shall be constructed out of 20-gauge/304 stainless steel, with all end-cap seams continuously welded and ground smooth. All horizontal and vertical plenum corners shall feature ¾" radii to facilitate cleaning. Plenums shall be available in one-piece construction up to 10 ft long with field assembly required for longer sections. Modular plenum systems shall utilize one independent plenum for each side of the system to provide a consistent air curtain barrier. Using multiple independent plenums to satisfy length requirements of any one side shall not be permitted. Plenum inlets shall include room-side-removable stainless steel opposed blade dampers. Damper adjustment shall be possible without removing the diffuser face.The linear slot diffuser face assembly shall feature two slots, 20-gauge/304 stainless steel with #4 brushed finish on all exposed surfaces, stainless steel equalizing baffle and fixed pattern controllers. Adjustable pattern controllers shall not be permitted.
C. The laminar flow diffusers shall feature a 20 gauge/304 stainless steel plenum and mounting frame. Inlets shall include stainless steel butterfly dampers that can be adjusted through a removable plug in the diffuser face. The laminar flow diffuser face assembly shall include a 20 gauge/304 stainless steel frame and 13% free-area perforated face with #4 brushed finish on all exposed surfaces and a stainless steel equalizing baffle to evenly distribute air across the diffuser face.
D. All diffuser face assemblies (linear slot and laminar flow) shall be secured using ¼ turn quick-release fasteners and safety cables for ease of installation and removal.

© Copyright Price Industries Limited 2011.